Taylor Valve Technology®

1500/2500 SERIES
Safety Relief Valves

TRUSTED
SINCE 1958
WORLDWIDE

The Original Self-Aligning Technology®

Precise.

Quality.

Reliable.

SINCE 1958

Taylor Valve Technology®
www.taylorvalve.com

Taylor Valve's line of high quality 1500/2500 Series safety relief valves are manufactured in accordance with stringent quality control procedures mandated by the American Society of Mechanical Engineers (ASME) and its inspection arm, the National Board of Boiler and Pressure Vessel Inspectors of Columbus, Ohio. Many of Taylor Valve's safety relief valves have carried the ASME UV (Unfired Vessel) Code Stamp since 1958.

A variety of materials and designs are available to meet the most exacting requirements of severe and critical applications.

High Performance Safety Relief Valves

Series 1500 Threaded & Flanged Safety Relief Valves

General Design Features

- Suitable for Air/Gas & Liquid Service Applications
- Both Flat Lapped Metal-To-Metal Seat & Bubble Tight Soft Seat Designs Available
- Manufactured in Accordance with ASME Code Section XIII, NBBI Capacity Certified
- Pressure Ranges from 15 PSI to 6170 PSI
- Temperature Ranges from -300˚F to +800˚F

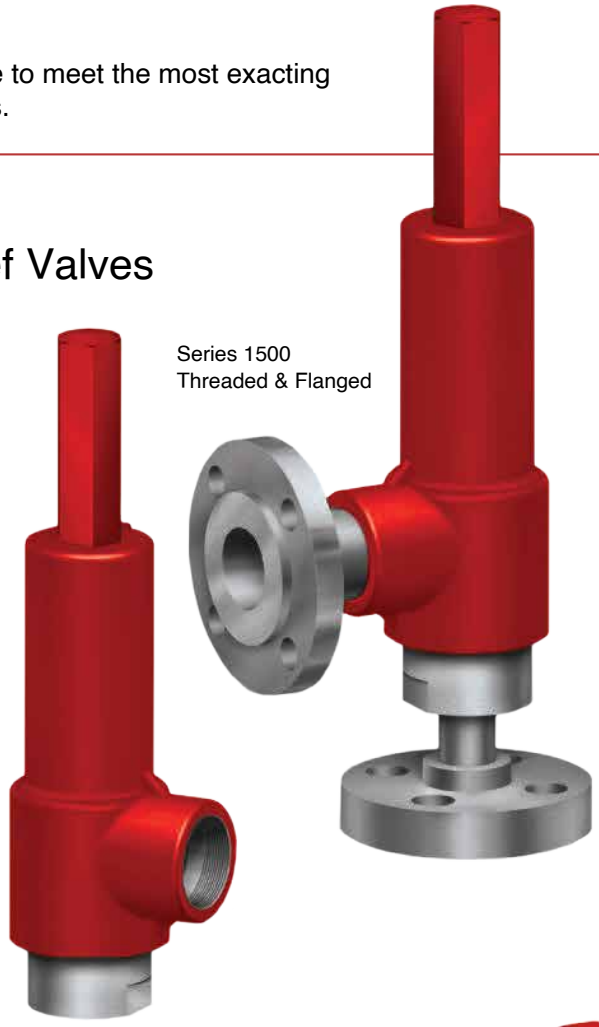

Series 1500
Threaded & Flanged

Series 2500 Flanged High Capacity Safety Relief Valves

General Design Features

- Available with NACE & Bellows Options
- Self-Aligning Disc & Guided One-Piece Disc Holder Assembly
- Interchangeable Discs for Metal-To-Metal & Soft Seat Seals
- Same Internals for Air/Gas & Liquid Service Applications
- Meets API 526 & 527 with Available Orifices "D" through "T"
- Manufactured in Accordance with ASME Code Section XIII, NBBI Capacity Certified

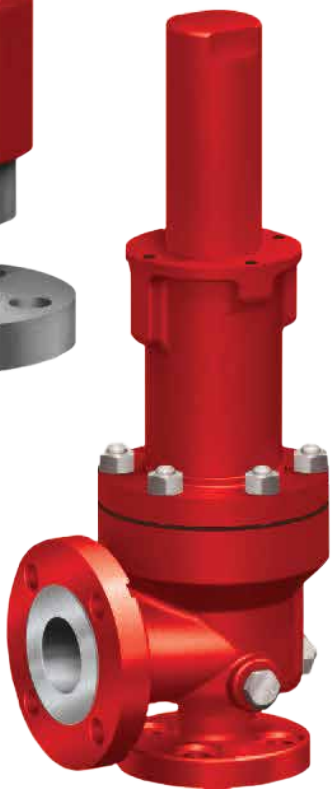

Series 2500

Table of Contents

Series 1500/2500 Design Features. 2

Series 1500

How to Order & Sizing Equations. 3
Parts List & Materials. 4-5
Dimensional Data & Weights. 6-7

Series 2500

How to Order & Sizing Equations. 8
Dimensional Data & Weights. 9
Parts List & Materials. 10-11

Part Number Codes & Engineering Data

Orifice Area (in^2)

C • 0.058	E • 0.230	G • 0.590
D • 0.129	F • 0.366	

Inlet x Outlet

Size /Available Orifice (Connection)	
E • 1/2" x 3/4" (C Orifice Only)	
F • 3/4" x 3/4" (C, D Orifice Only)	J • 1" x 2" (E, F Orifice Only)
1 • 1/2" x 1" (C Orifice Only)	2 • 3/4" x 1" (C, D Orifice Only)
3 • 1" x 1" (C, D Orifice Only)	
5 • 1" x 1-1/2" (D, E, F Orifice Only)	
6 • 1-1/2" x 1-1/2" (D, E, F Orifice Only)	
7 • 1-1/2" x 2" (E, F, G Orifice Only)	
8 • 2" x 2" (E, F, G Orifice Only)	

Connection

Gender	M • M x F		
	F • F x F		
Flanged	A • 150 x 150	C • 600 x 150	E • 1500 x 300
	B • 300 x 150	D • 600 x 300	G • 2500 x 300
Flange x Thread			

Facing

0 • NPT
1 • RF x RF
2 • RTJ x RF

Seat Type

E • EPDM	T • Teflon®
K • Kalrez®	V • Fluorocarbon
M • Metal	
N • Nitrile	

Material

Body/ Spring/ Trim	
0 • WCB/CS/316SS	3 • CF8M/316SS/316SS
1 • WCB/316SS/316SS	4 • CF8M (NACE)/Inconel®/316SS
2 • WCB (NACE)/ Inconel®/ 316SS	

Cap Type

0 • Closed	L • Open Lever	P • Packed Lever
G • Closed w/Gag	M • Lever w/Gag	S • Packed w/Gag

Spring Code

Consult Factory for Spring Chart.

C Orifice is available in soft seat only.
Lift lever is required for ASME code service for air or water over 140˚F.
Call for market price on Kalrez®seat material.

15 X X X X X X X/XX

Temperature Limits

Temperature	Seat Material					
	Nitrile	EPDM	Viton®	Neoprene	Kalrez®	Teflon®
Lower ˚F	-65	-70	-15	-45	30	-300
Upper ˚F	225	300	400	300	550	400

Sizing Equations

US Units

Air/Gas

$$W = CK_dAP_1\sqrt{\frac{M}{TZ}}$$

Liquid

$$Q = 38K_dK_vA\sqrt{\frac{P_1 - P_d}{G}}$$

Where

$P_1 = 1.1P_{set} + 14.7$ over 30 psi or

$P_1 = P_{set} + 17.7$ under 30 psi

$$C = 520\sqrt{k\left(\frac{2}{k+1}\right)^{\frac{k+1}{k-1}}}$$

W = Capacity in lbm/hr
P_{set} = Set Pressure in psig
P_d = Discharge Pressure
A = Orifice Area
K_d = .863 for Air/Gas/Steam
K_d = .659 for Liquid
K_v = Viscosity Correction Factor
Q = Capacity in GPM
Z = Compressibility Factor
T = Temperature in˚R
k = Ratio of Specific Heats
M = Molecular Weight
G = Specific Gravity

SI Units

Air/Gas

$$W = 13160\,CK_dAP_1\sqrt{\frac{M}{TZ}}$$

Liquid

$$Q = \frac{K_dK_vA}{11.78}\sqrt{\frac{P_1 - P_d}{G}}$$

Where

$P_1 = 1.1P_{set} + 101.3$ over 207 kPa or

$P_1 = P_{set} + 122$ under 207 kPa

$$C = 520\sqrt{k\left(\frac{2}{k+1}\right)^{\frac{k+1}{k-1}}}$$

W = Capacity in kg/hr
P_{set} = Set Pressure in kPag
P_d = Discharge Pressure
A = Orifice Area
K_d = .863 for Air/Gas/Steam
K_d = .659 for Liquid
K_v = Viscosity Correction Factor
Q = Capacity in liter/min
Z = Compressibility Factor
T = Temperature in˚K
k = Ratio of Specific Heats
M = Molecular Weight
G = Specific Gravity

Contact Factory in order to receive sizing program and/ or capacity charts.

Parts List & Material Selection

Index	Description	Materials, Codes & Temperature Ranges				
		-20˚F to +450˚F (-29˚C to +232˚C) 0	-20˚F to +650˚F (-29˚C to +343˚C) 1	NACE MR0175 -20˚F to +750˚F (-29˚C to +399˚C) 2	-300˚F to +800˚F (-149˚C to +426˚C) 3	NACE MR0175 -300˚F to +800˚F (-149˚C to +426˚C) 4
1	Cap	Carbon Steel	Carbon Steel	Carbon Steel	316 Stainless Steel	316 Stainless Steel
2	Adjusting Screw	316 Stainless Steel	316 Stainless Steel	316 Stainless Steel	316 Stainless Steel	316 Stainless Steel
3	Adjusting Nut	Carbon Steel	Carbon Steel	316 Stainless Steel	316 Stainless Steel	316 Stainless Steel
4	O-Ring	Specify	Specify	Specify	Specify	Specify
5	Spring Plate	316 Stainless Steel	316 Stainless Steel	316 Stainless Steel	316 Stainless Steel	316 Stainless Steel
6	Stem	316 Stainless Steel	316 Stainless Steel	316 Stainless Steel	316 Stainless Steel	316 Stainless Steel
7	Spring	316 Stainless Steel(2)	316 Stainless Steel(2)	Inconel® X750	316 Stainless Steel(2)	Inconel® X750
8	Stem Head	316 Stainless Steel	316 Stainless Steel	316 Stainless Steel	316 Stainless Steel	316 Stainless Steel
9	Disc Holder	316 Stainless Steel	316 Stainless Steel	316 Stainless Steel	316 Stainless Steel	316 Stainless Steel
10	Disc Retainer	316 Stainless Steel	316 Stainless Steel	316 Stainless Steel	316 Stainless Steel	316 Stainless Steel
11	Disc	316 Stainless Steel	316 Stainless Steel	316 Stainless Steel	316 Stainless Steel	316 Stainless Steel
12	Body	WCB	WCB	WCB	CF8M	CF8M
13	Guide	316 Stainless Steel	316 Stainless Steel	316 Stainless Steel	316 Stainless Steel	316 Stainless Steel
14	Nozzle	316 Stainless Steel	316 Stainless Steel	316 Stainless Steel	316 Stainless Steel	316 Stainless Steel
15	Lap Joint Flange (Outlet)	Carbon Steel	Carbon Steel	Carbon Steel	316 Stainless Steel	316 Stainless Steel
16	Lap Joint Stub End (Outlet)	316 Stainless Steel	316 Stainless Steel	316 Stainless Steel	316 Stainless Steel	316 Stainless Steel
17	Lap Joint Flange (Inlet)	Carbon Steel	Carbon Steel	Carbon Steel	316 Stainless Steel	316 Stainless Steel
18	Lap Joint Stub End (Inlet)	316 Stainless Steel	316 Stainless Steel	316 Stainless Steel	316 Stainless Steel	316 Stainless Steel
	Open Lift Lever					
19	Cap	WCB	WCB	WCB	CF8M	CF8M
20	Release Washer	Carbon Steel	Carbon Steel	Carbon Steel	316 Stainless Steel	316 Stainless Steel
21	Release Nut	Carbon Steel	Carbon Steel	Carbon Steel	316 Stainless Steel	316 Stainless Steel
22	Lever Pin	Carbon Steel	Carbon Steel	Carbon Steel	316 Stainless Steel	316 Stainless Steel
23	Lever	Carbon Steel	Carbon Steel	Carbon Steel	316 Stainless Steel	316 Stainless Steel
	Packed Lift Lever					
24	Cap	WCB	WCB	WCB	CF8M	CF8M
25	Release Nut	Carbon Steel	316 Stainless Steel	316 Stainless Steel	316 Stainless Steel	316 Stainless Steel
26	Release Washer	Carbon Steel	Carbon Steel	Carbon Steel	316 Stainless Steel	316 Stainless Steel
27	Lever Shaft	316 Stainless Steel	316 Stainless Steel	316 Stainless Steel	316 Stainless Steel	316 Stainless Steel
28	Gland O-Ring	Same as Item 4	Same as Item 4	Same as Item 4	Same as Item 4	Same as Item 4
29	Lock Nut	Carbon Steel	Carbon Steel	Carbon Steel	316 Stainless Steel	316 Stainless Steel
30	Lever Pin	Carbon Steel	Carbon Steel	Carbon Steel	302 Stainless Steel	302 Stainless Steel
31	Shaft O-Ring	Same as Item 4	Same as Item 4	Same as Item 4	Same as Item 4	Same as Item 4
32	Gland Nut	Carbon Steel	316 Stainless Steel	Carbon Steel	316 Stainless Steel	316 Stainless Steel
33	Lever	Carbon Steel	Carbon Steel	Carbon Steel	316 Stainless Steel	316 Stainless Steel
	Soft Seat Option					
34	Disc	316 Stainless Steel	316 Stainless Steel	316 Stainless Steel	316 Stainless Steel	316 Stainless Steel
35	Disc Retainer Screw	316 Stainless Steel	316 Stainless Steel	316 Stainless Steel	316 Stainless Steel	316 Stainless Steel
36	O-Ring(1)	Specify	Specify	Specify	Specify	Specify

(1) Soft Seat Valve Only
(2) Taylor Valve reserves the right to substitute Inconel® X750 in lieu of 316SS for higher pressure springs.
Materials: WCB-ASME SA216, CF8M-ASME SA351

1500 Component Parts

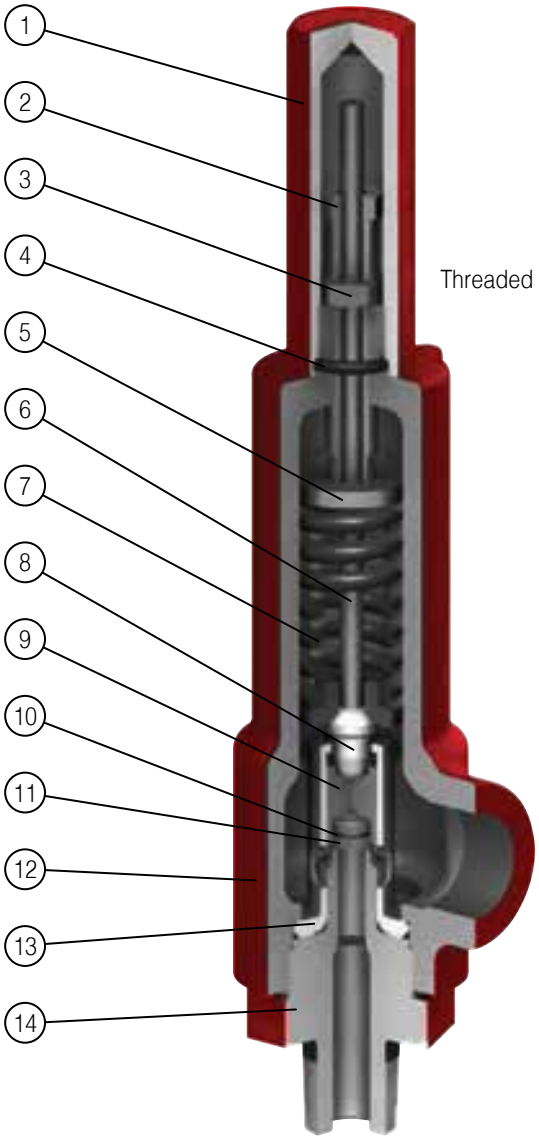

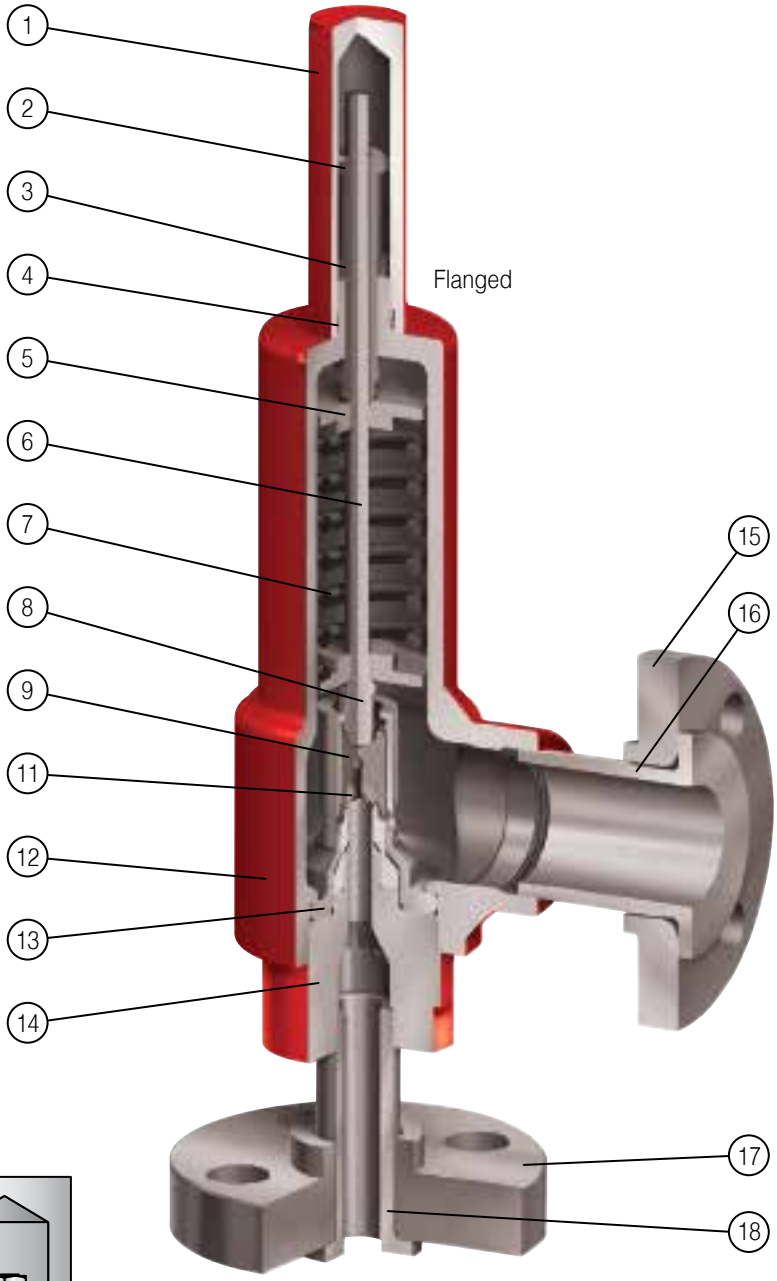

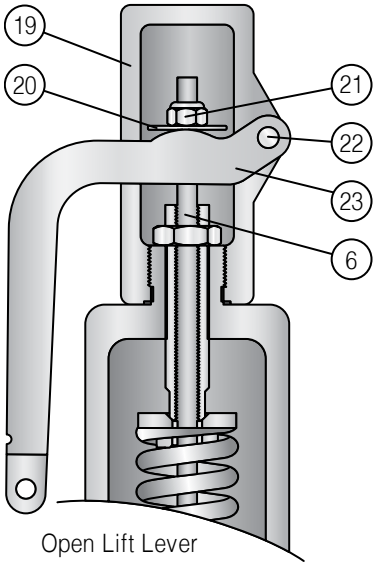

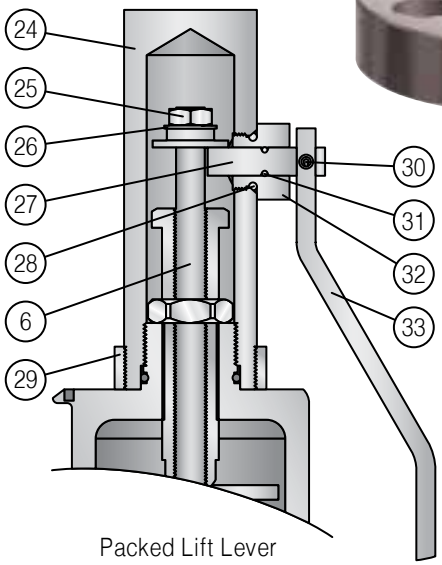

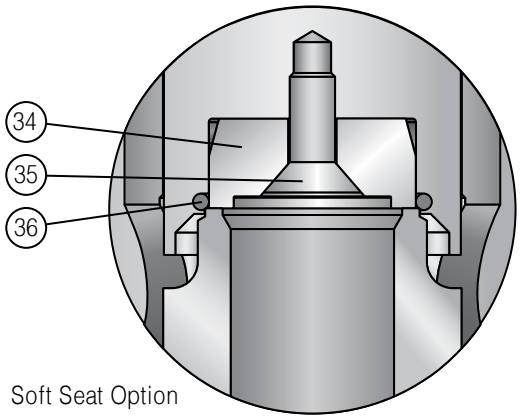

Threaded & Flanged, Dim. Data & Weights

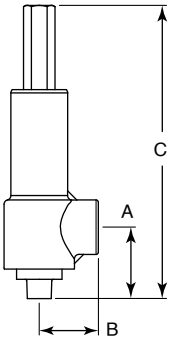

Series 1500 Threaded

Orifice	Inlet x Outlet	FNPT x FNPT MNPT x FNPT	MaxSet (psig)	Dimension (in.) A	B	C	Wt. (lbs.)
C Actual Area .058 in.²	1/2 x 3/4	MNPT x FNPT	3000	3-1/4	1-3/4	12-1/4	8
		FNPT x FNPT	6150	3-1/4	1-3/4	12-1/4	8
	3/4 x 3/4	MNPT x FNPT	6150	3-1/4	1-3/4	12-1/4	8
		FNPT x FNPT	6150	3-1/4	1-3/4	12-1/4	8
	1/2 x 1	MNPT x FNPT	3000	3-1/4	1-3/4	12-1/4	8
		FNPT x FNPT	6150	3-1/4	1-3/4	12-1/4	8
	3/4 x 1	MNPT x FNPT	6150	3-1/4	1-3/4	12-1/4	8
		FNPT x FNPT	6150	3-1/4	1-3/4	12-1/4	8
	1 x 1	MNPT x FNPT	6150	3-1/4	1-3/4	12-1/4	8
		FNPT x FNPT	6000	3-1/4	1-3/4	12-1/4	8
D API Area .110 in.² Actual Area .129 in.²	3/4 x 3/4	MNPT x FNPT	2600	3-1/4	1-3/4	12-1/4	8
		FNPT x FNPT	3150	3-1/4	1-3/4	12-1/4	8
	3/4 x 1	MNPT x FNPT	2600	3-1/4	1-3/4	12-1/4	8
		FNPT x FNPT	3150	3-1/4	1-3/4	12-1/4	8
	1 x 1	MNPT x FNPT	3150	3-1/4	1-3/4	12-1/4	8
		FNPT x FNPT	3150	3-1/4	1-3/4	12-1/4	8

Note: Weights are approximate.
Overall height with lever: Add 1" to outlet C & D valves.
Add 1-1/2" to outlet E, F & G valves.

Orifice	Inlet x Outlet	FNPT x FNPT MNPT x FNPT	MaxSet (psig)	Dimension (in.) A	B	C	Wt. (lbs.)
D API Area .110 in.² Actual Area .129 in.²	3/4 x 1-1/2	MNPT x FNPT	2700	3-11/16	2-9/16	13-5/8	12
		FNPT x FNPT	3950	3-11/16	2-9/16	13-5/8	12
	1 x 1-1/2	MNPT x FNPT	3950	3-11/16	2-9/16	13-5/8	12
		FNPT x FNPT	3950	3-11/16	2-9/16	13-5/8	12
	1-1/2 x 1-1/2	MNPT x FNPT	3950	3-11/16	2-9/16	13-5/8	12
		FNPT x FNPT	3950	3-11/16	2-9/16	13-5/8	12
E API Area .196 in.² Actual Area .230 in.²	1 x 1-1/2	MNPT x FNPT	2400	3-11/16	2-9/16	13-5/8	31
		FNPT x FNPT	2500	3-11/16	2-9/16	13-5/8	31
	1-1/2 x 1-1/2	MNPT x FNPT	2500	3-11/16	2-9/16	13-5/8	31
		FNPT x FNPT	2500	3-11/16	2-9/16	13-5/8	31
	1 x 2	MNPT x FNPT	2400	4	3-1/4	16-1/2	31
		FNPT x FNPT	2500	4	3-1/4	16-1/2	31
	1-1/2 x 2	MNPT x FNPT	3850	4	3-1/4	16-1/2	31
		FNPT x FNPT	3850	4	3-1/4	16-1/2	31
	2 x 2	MNPT x FNPT	3850	4	3-1/4	16-1/2	31
		FNPT x FNPT	3600	4	3-1/4	16-1/2	31
F API Area .307 in.² Actual Area .366 in.²	1 x 1-1/2	MNPT x FNPT	900	4	3-1/4	16-1/2	31
		FNPT x FNPT	1550	4	3-1/4	16-1/2	31
	1-1/2 x 1-1/2	MNPT x FNPT	1550	4	3-1/4	16-1/2	31
		FNPT x FNPT	1550	4	3-1/4	16-1/2	31
	1 x 2	MNPT x FNPT	900	4	3-1/4	16-1/2	31
		FNPT x FNPT	1550	4	3-1/4	16-1/2	31
	1-1/2 x 2	MNPT x FNPT	1550	4	3-1/4	16-1/2	31
		FNPT x FNPT	1550	4	3-1/4	16-1/2	31
	2 x 2	MNPT x FNPT	1550	4	3-1/4	16-1/2	31
		FNPT x FNPT	1550	4	3-1/4	16-1/2	31
G API Area .503 in.² Actual Area .590 in.²	1-1/2 x 2	MNPT x FNPT	1650	4-3/8	3-3/4	19-3/8	34
		FNPT x FNPT	1650	4-3/8	3-3/4	19-3/8	34
	2 x 2	MNPT x FNPT	1650	4-3/8	3-3/4	19-3/8	34
		FNPT x FNPT	1650	4-3/8	3-3/4	19-3/8	34

Series 1500 Flanged

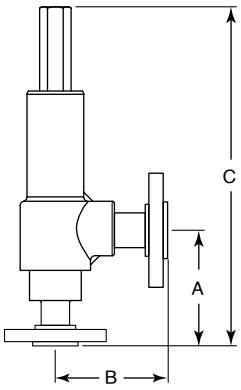

Orifice	Inlet x Outlet	FLANGE Inlet x Outlet	MaxSet (psig)	Dimension (in.) A	B	C	Wt. (lbs.)
C Actual Area .058 in.²	1/2 x 3/4	150 x 150	285	6	4	14-13/16	11
		300 x 150	740	6	4	14-13/16	12
		600 x 150	1480	6	4	14-13/16	12
		600 x 300	1480	6	4	14-13/16	13
		1500 x 300	3400	7-1/2	5	16-5/16	16
	1/2 x 1	150 x 150	285	6	4	14-13/16	11
		300 x 150	740	6	4	14-13/16	12
		600 x 150	1480	6	4	14-13/16	12
		600 x 300	1480	6	4	14-13/16	13
		1500 x 300	3400	7-1/2	5	16-5/16	16
	3/4 x 3/4	150 x 150	285	6-1/4	4	15-1/16	13
		300 x 150	740	6-1/4	4	15-1/16	14
		600 x 150	1480	6-1/4	4	15-1/16	14
		600 x 300	1480	6-1/4	5	15-1/16	15
		1500 x 300	3705	6-1/4	5	15-1/16	18

Series 1500 Flanged, Continued

Orifice	Inlet x Outlet	FLANGE Inlet x Outlet	MaxSet (psig)	Dimension (in.) A	B	C	Wt. (lbs.)
C Actual Area .058 in²	3/4 x 1	150 x 150	285	6-1/4	4	15-1/16	13
		300 x 150	740	6-1/4	4	15-1/16	14
		600 x 150	1480	6-1/4	4	15-1/16	14
		600 x 300	1480	6-1/4	5	15-1/16	15
		1500 x 300	3705	6-3/16	5	15-1/16	18
	1 x 1	150 x 150	285	6-1/2	4-1/4	15-5/16	14
		300 x 150	740	6-1/2	4-1/4	15-5/16	15
		600 x 150	1480	6-1/2	4-1/4	15-5/16	15
		600 x 300	1480	7-1/2	5	16-1/4	16
		1500 x 300	3705	7-1/2	5	16-1/4	21
		2500 x 300	6170	7-1/2	5	16-1/4	24
D API Area .110 in² Actual Area .129 in²	3/4 x 1	150 x 150	285	6-1/4	4	14	13
		300 x 150	740	6-1/4	4	14	14
		600 x 150	1480	6-1/4	4	14	14
		600 x 300	1480	6-1/4	5	14	15
		1500 x 300	1750	6-1/4	5	14	18
	1 x 1	150 x 150	285	6-1/2	4-1/4	14-1/4	14
		300 x 150	740	6-1/2	4-1/4	14-1/4	15
		600 x 150	1480	6-1/2	4-1/4	14-1/4	15
		600 x 300	1480	7-1/2	5	15-3/8	16
		1500 x 300	2000	7-1/2	5	15-3/8	20
		2500 x 300	2000	7-1/2	5	15-3/8	25
	1 x 1-1/2	150 x 150	285	6-1/4	5	15-1/8	15
		300 x 150	740	6-1/4	5	15-1/8	16
		600 x 150	1480	6-1/4	5	15-1/8	17
		600 x 300	1480	6-1/4	5-3/4	15-1/8	20
		1500 x 300	3500	6-1/4	5-3/4	15-1/8	24
		2500 x 300	3500	7-1/4	5-3/4	16-1/8	29
	1-1/2 x 1-1/2	150 x 150	285	7-1/8	5	16	17
		300 x 150	740	7-1/8	5	16	20
		600 x 150	1480	7-1/8	5	16	20
		600 x 300	1480	7-1/8	5-3/4	16	20
		1500 x 300	3500	7-1/8	5-3/4	16	20
		2500 x 300	3500	7-1/4	5-3/4	16-1/8	42
E API Area .196 in² Actual Area .230 in²	1 x 1-1/2	150 x 150	285	6-1/4	5	15-1/8	19
		300 x 150	740	6-1/4	5	15-1/8	20
		600 x 150	1480	6-1/4	5	15-1/8	20
		600 x 300	1480	6-1/4	5-3/4	15-1/8	24
		1500 x 300	1750	7-1/4	5-3/4	16-1/8	28
	1-1/2 x 1-1/2	150 x 150	285	6-1/4	5	15-1/8	24
		300 x 150	740	6-1/4	5	15-1/8	24
		600 x 150	1480	6-1/4	5	15-1/8	24
		600 x 300	1480	6-1/4	5-3/4	15-1/8	23
		1500 x 300	2000	7-1/4	5-3/4	16-1/8	36
		2500 x 300	2000	7-1/4	5-3/4	16-1/8	46

Orifice	Inlet x Outlet	FLANGE Inlet x Outlet	MaxSet (psig)	Dimension (in.) A	B	C	Wt. (lbs.)
E API Area .196 in² Actual Area .230 in²	1 x 2	150 x 150	285	6-1/2	6	18-13/16	29
		300 x 150	740	6-1/2	6	18-13/16	31
		600 x 150	1480	6-1/2	6	18-13/16	31
		600 x 300	1480	6-1/2	6	18-13/16	33
	1-1/2 x 2	150 x 150	285	6-1/2	6	18-1/8	23
		300 x 150	740	6-1/2	6	18-1/8	26
		600 x 150	1480	6-1/2	6	18-1/8	26
		600 x 300	1480	6-1/2	6	18-1/8	27
		1500 x 300	3500	8-1/4	6	19-7/8	37
		2500 x 300	3500	8-1/4	6	19-7/8	47
	2 x 2	150 x 150	285	6-3/4	6	18-3/8	47
		300 x 150	740	6-3/4	6	18-3/8	26
		600 x 150	1480	6-3/4	6	18-3/8	28
		600 x 300	1480	6-3/4	6	18-3/8	30
		1500 x 300	3500	8-1/4	6	19-7/8	44
		2500 x 300	3500	8-1/4	6	19-7/8	60
F API Area .307 in² Actual Area .366 in²	1 x 1-1/2	150 x 150	285	6-1/4	5	18	38
		300 x 150	740	6-1/4	5	18	39
		600 x 150	740	5-1/8	5	17	37
		600 x 300	740	5-1/8	5-3/4	17	40
	1-1/2 x 1-1/2	150 x 150	285	6-1/2	5	18-1/8	39
		300 x 150	740	7-1/8	5	18-3/4	43
		600 x 150	1480	7-1/8	5	18-3/4	43
		600 x 300	1480	7-1/8	5-3/4	18-3/4	46
	1 x 2	150 x 150	285	6-1/2	6	18-13/16	30
		300 x 150	740	6-1/2	6	18-13/16	32
		600 x 150	1200	6-1/2	6	18-13/16	32
		600 x 300	1200	6-1/2	6	18-13/16	34
	1-1/2 x 2	150 x 150	285	6-1/2	6	18-1/8	42
		300 x 150	740	6-1/2	6	18-1/8	45
		600 x 150	1480	6-1/2	6	18-1/8	45
		600 x 300	1480	6-1/2	6	18-1/8	46
		1500 x 300	1500	8-1/4	6	19-7/8	55
	2 x 2	150 x 150	285	6-3/4	6	18-3/8	44
		300 x 150	740	6-3/4	6	18-3/8	46
		600 x 150	1480	6-3/4	6	18-3/8	47
		600 x 300	1480	6-3/4	6	18-3/8	49
		1500 x 300	1500	8-1/4	6	19-7/8	63
G API Area .503 in² Actual Area .590 in²	1-1/2 x 2	150 x 150	285	7-1/8	6-1/2	21	45
		300 x 150	740	7-1/8	6-1/2	21	48
		600 x 150	1480	7-1/8	6-1/2	21	50
		600 x 300	1480	7-1/8	6-1/2	21	51
	2 x 2	150 x 150	285	7-1/8	6-1/2	21	48
		300 x 150	740	7-1/8	6-1/2	21	51
		600 x 150	1480	7-1/8	6-1/2	21	51
		600 x 300	1480	7-1/8	6-1/2	21	54

Note: Weights are approximate.
Overall height with lever:Add 1" to outlet C, D & E valves. Add 1-1/2" to outlet F & G valves.

Part Number Codes & Engineering Data

Series	25 • Non-Bellows	B25 • With Bellows		
Seat Type	E • EPDM	M • Metal	V • Fluorocarbon	
	K • Kalrez®	N • Nitrile		
Inlet Flange Size	10 • 1"	20 • 2"	30 • 3"	60 • 6"
	15 • 1 1/2"	25 • 2 1/2"	40 • 4"	80 • 8"
Orifice Area (in.²)	DR • 0.160	H • 0.911	M • 4.047	Q • 12.699
	ER • 0.219	J • 1.457	N • 4.988	R • 18.383
	F • 0.317	K • 2.125	P • 7.330	T • 28.274
	G • 0.568	L • 3.281		
Outlet Flange Size	20 • 2"	30 • 3"	60 • 6"	10 • 10"
	25 • 2 1/2"	40 • 4"	80 • 8"	
Inlet Flange Class	ANSI B16.5			
	A • 150	C • 300	D • 600	
Flange Facing (Inlet x Outlet)	1 • RF x RF	2 • RTJ x RF		
Material	Body/Spring/Trim			
	C1 • WCB/CS or AS/316SS		S1 • CF8M/SS/316SS	
	C2 • WCB/316SS/316SS		S3 • CF8M NACE/Inconel®/316SS	
	C4 • WCB NACE/Inconel®/316SS		X1 • Special	
Service Code	A • ASME Sec. XIII Air/Gas			
	C • ASME Sec. XIII Liquid			
Cap Type	G • Closed w/Gag	0 • Closed Top		
	L • Open Lever	P • Packed Lever		
	M • Lever w/Gag	S • Packed w/Gag		
Spring Code	Consult Factory for Spring Chart.			

XX X XX XX XX X X XX X X/XX

Sizing Equations

US Units

Air/Gas

$$W = CK_d A P_1 \sqrt{\frac{M}{TZ}}$$

Liquid

$$Q = 38 K_d K_v A \sqrt{\frac{P_1 - P_d}{G}}$$

Where

$P_1 = 1.1\, P_{set} + 14.7$ over 30 psi or

$P_1 = P_{set} + 17.7$ under 30 psi

$$C = 520 \sqrt{k \left(\frac{2}{k+1}\right)^{\frac{k+1}{k-1}}}$$

- W = Capacity in lbm/hr
- P_{set} = Set Pressure in psig
- P_d = Discharge Pressure
- A = Orifice Area
- K_d = .868 for Air/Gas/Steam
- K_d = .664 for Liquid
- K_v = Viscosity Correction Factor
- Q = Capacity in GPM
- Z = Compressibility Factor
- T = Temperature in °R
- k = Ratio of Specific Heats
- M = Molecular Weight
- G = Specific Gravity

SI Units

Air/Gas

$$W = 13160\, CK_d A P_1 \sqrt{\frac{M}{TZ}}$$

Liquid

$$Q = \frac{K_d K_v A}{11.78} \sqrt{\frac{P_1 - P_d}{G}}$$

Where

$P_1 = 1.1\, P_{set} + 101.3$ over 207 kPa or

$P_1 = P_{set} + 122$ under 207 kPa

$$C = 520 \sqrt{k \left(\frac{2}{k+1}\right)^{\frac{k+1}{k-1}}}$$

- W = Capacity in kg/hr
- P_{set} = Set Pressure in kPag
- P_d = Discharge Pressure
- A = Orifice Area
- K_d = .868 for Air/Gas/Steam
- K_d = .664 for Liquid
- K_v = Viscosity Correction Factor
- Q = Capacity in liter/min
- Z = Compressibility Factor
- T = Temperature in °K
- k = Ratio of Specific Heats
- M = Molecular Weight
- G = Specific Gravity

Contact Factory in order to receive sizing program and/or capacity charts.

Flanged, Dimensional Data & Weights

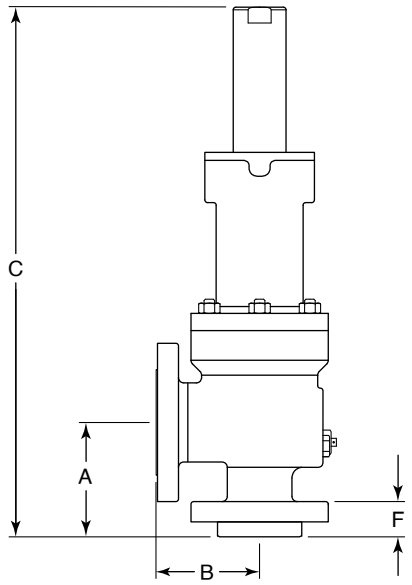

Inlet x Outlet	Flange Ratings	Type*	MaxSet (psig)	Dimension (in.)				Wt. (lbs.)
				A	B	C	F	
1 x 2	150 x 150	10DR20A	285	4-1/8	4-1/2	21-1/2	1-1/4	49
	300 x 150	10DR20C	740	4-1/8	4-1/2	21-1/2	1-3/8	50
	600 x 150	10DR20D	1480	4-1/8	4-1/2	21-1/2	1-3/8	50
1 x 2	150 x 150	10ER20A	285	4-1/8	4-1/2	21-1/2	1-1/4	49
	300 x 150	10ER20C	740	4-1/8	4-1/2	21-1/2	1-3/8	50
	600 x 150	10ER20D	1480	4-1/8	4-1/2	21-1/2	1-3/8	50
1-1/2x2	150 x 150	15F20A	285	4-7/8	4-3/4	21-1/2	1-5/16	54
	300 x 150	15F20C	740	4-7/8	6	21-1/2	1-7/16	64
	600 x 150	15F20D	1480	4-7/8	6	21-1/2	1-1/2	64
1-1/2x 2-1/2	150 x 150	15G25A	285	4-7/8	4-3/4	21-1/2	1-5/16	55
	300 x 150	15G25C	740	4-7/8	6	21-1/2	1-7/16	66
	600 x 150	15G25D	1480	4-7/8	6	21-1/2	1-1/2	69
1-1/2x3	150 x 150	15G30A	285	4-7/8	4-3/4	21-1/2	1-5/16	60
	300 x 150	15G30C	740	4-7/8	6	21-1/2	1-7/16	70
	600 x 150	15G30D	1480	4-7/8	6	21-1/2	1-1/2	73
1-1/2x3	150 x 150	15H30A	285	5-1/8	4-7/8	24-1/2	1-1/2	60
2 x 3	300 x 150	20H30C	740	5-1/8	4-7/8	24-1/2	1-1/2	65
	600 x 150	20H30D	1480	6-1/16	6-3/8	29	1-1/2	85
2 x 3	150 x 150	20J30A	285	5-3/8	4-7/8	25-1/8	1-1/2	75
2-1/2x4	300 x 150	25J40C	740	6-1/8	6-3/4	29-1/2	2	100
	600 x 150	25J40D	1480	6-1/8	6-3/4	29-1/2	2	105

Note: Weights are approximate.
*Not a full model number.

Inlet x Outlet	Flange Ratings	Type*	MaxSet (psig)	Dimension (in.)				Wt. (lbs.)
				A	B	C	F	
3 x 4	300 x 150	30J40C	740	7-1/4	7-1/8	30-3/8	1-15/16	110
	600 x 150	30J40D	1480	7-1/4	7-1/8	25-7/8	1-1/2	112
3 x 4	150 x 150	30K40A	285	6-1/8	6-3/8	26-3/8	1-3/4	126
	300 x 150	30K40C	740	6-1/8	6-3/8	30-3/8	1-15/16	136
	600 x 150	30K40D	1480	7-1/4	7-1/8	29-3/4	1-1/2	138
3 x 4	150 x 150	30L40A	285	6-1/8	6-1/2	29-3/4	1-3/4	140
4 x 6	300 x 150	40L60C	740	7-1/16	7-1/8	32-3/4	2-3/16	220
	600 x 150	40L60D	1000	7-1/16	8	32-3/4	1-1/2	230
4 x 6	150 x 150	40M60A	285	7	7-1/4	29-3/4	1-7/8	185
	300 x 150	40M60C	740	7	7-1/4	32-3/4	2-3/16	230
	600 x 150	40M60D	1000	7	8	33-3/4	2	300
4 x 6	150 x 150	40N60A	285	7-3/4	8-1/4	33-1/2	1-1/2	220
	300 x 150	40N60C	740	7-3/4	8-1/4	34-3/4	1-7/8	260
	600 x 150	40N60D	1000	7-3/4	8-3/4	37-7/8	2-3/16	300
4 x 6	150 x 150	40P60A	285	7-1/8	9	34-3/8	1-1/2	260
	300 x 150	40P60C	525	8-7/8	10	40-1/2	1-7/8	350
	600 x 150	40P60D	1000	8-7/8	10	40-7/8	2-3/16	530
6 x 8	150 x 150	60Q80A	165	9-7/16	9-1/2	40-1/2	1-13/16	430
	300 x 150	60Q80C	300	9-7/16	9-1/2	43-3/8	2-3/16	530
	600 x 150	60Q80D	600	9-7/16	9-1/2	45-7/8	2-1/2	645
6 x 8	150 x 150	60R80A	100	9-7/16	9-1/2	42	1-13/16	495
6 x 10	300 x 150	60R10C	230	9-7/16	10-1/2	44-7/8	2-3/16	550
	600 x 150	60R10D	300	9-7/16	10-1/2	46-3/4	2-1/2	675
8 x 10	150 x 150	80T10A	65	10-7/8	11	45-3/4	2-1/16	620
	300 x 150	80T10C	120	10-7/8	11	48-1/2	3	840

Parts List & Material Selection

Index	Description	Materials, Codes & Temperature Ranges				
		-20˚F to +450˚F (-29˚C to +232˚C) C1	-20˚F to +450˚F (-29˚C to +232˚C) C2	-20˚F to +800˚F (-29˚C to +426˚C) C4	-300˚F to +450˚F (-149˚C to +232˚C) S1	-300˚F to +800˚F (-149˚C to +427˚C) S3
1	Cap	ASTM A108	ASTM A108	ASTM A108	316 Stainless Steel	316 Stainless Steel
2	Adjusting Screw	Plated Carbon Steel	316 Stainless Steel	Plated Carbon Steel	316 Stainless Steel	316 Stainless Steel
3	Adjusting Lock Nut	Plated Carbon Steel	316 Stainless Steel	Plated Carbon Steel	316 Stainless Steel	316 Stainless Steel
4	Cap Gasket	Stainless Steel	Stainless Steel	Stainless Steel	Stainless Steel	Stainless Steel
5	Spring Plate	316 Stainless Steel	316 Stainless Steel	316 Stainless Steel	316 Stainless Steel	316 Stainless Steel
6	Stem	316 Stainless Steel	316 Stainless Steel	316 Stainless Steel	316 Stainless Steel	316 Stainless Steel
7	Spring	Carbon Steel	T316	Inconel®X750	T316	Inconel®X750
8	Stem Joint Ball	440C	440C	Cobalt	440C	440C
9	Stem Joint	316 Stainless Steel	316 Stainless Steel	316 Stainless Steel	316 Stainless Steel	316 Stainless Steel
10	Stem Joint Retainer	T302	Inconel®X750	Inconel®X750	T302	Inconel®X750
11	Guide	17-4PH	316 Stainless Steel	17-4PH	A479 316	17-4PH
12	Guide Gasket	Soft Iron	SA240 316	Soft Iron	SA240 316	SA240 316
13	Disc	316SS or CF8M	316SS or CF8M	316SS or CF8M	316SS or CF8M	316SS or CF8M
14	Drain Plug	SA105	SA105	SA105	SA182 F316	SA182 F316
15	Warn Ring	316SS or CF8M	316SS or CF8M	316SS or CF8M	316SS or CF8M	316SS or CF8M
16	Nozzle	316SS or CF8M	316SS or CF8M	316SS or CF8M	316SS or CF8M	316SS or CF8M
17	Gasket, Body/Nozzle	Soft Iron	316 Stainless Steel	Soft Iron	316 Stainless Steel	316 Stainless Steel
18	Bonnet	WCB	WCB	WCB	CF8M	CF8M
19	Bonnet Stud	SA193 Gr. B7	SA193 Gr. B7	320 L7M or Gr. 8	SA193 Gr.B8	SA193 Gr.B8
20	Bonnet Stud Nuts	SA194 Gr. 2H	SA194 Gr. 2H	SA194 Gr. 2H	A194 Gr. 8	A194 Gr. 8
21	Body	WCB	WCB	WCB	CF8M	CF8M
22	Disc Holder	316SS or CF8M	316SS or CF8M	316SS or CF8M	316SS or CF8M	316SS or CF8M
23	Disc Retaining Ring	T302	Inconel®X750	Inconel®X750	Stainless Steel	Inconel®X750
24	Lock Pin Gasket	Soft Iron	SA240 316	Soft Iron	SA240 316	SA240 316
25	Lock Pin	316 Stainless Steel	316 Stainless Steel	316 Stainless Steel	316 Stainless Steel	316 Stainless Steel
26	Name Plate (Not Shown)	Stainless Steel	Stainless Steel	Stainless Steel	Stainless Steel	Stainless Steel
	Soft Seat Option					
27	Disc Holder	316 Stainless Steel	316 Stainless Steel	316 Stainless Steel	316 Stainless Steel	316 Stainless Steel
28	Seat O-Ring	Specify	Specify	Specify	Specify	Specify
29	Retaining Ring	Inconel®	Inconel®	Inconel®	Inconel®	Inconel®
30	O-Ring Retainer	316 Stainless Steel	316 Stainless Steel	316 Stainless Steel	316 Stainless Steel	316 Stainless Steel
31	Retaining Screw	Stainless Steel	Stainless Steel	Stainless Steel	Stainless Steel	Stainless Steel
	Packed & Open Lift Lever					
32	Shaft	Stainless Steel	Stainless Steel	Stainless Steel	Stainless Steel	Stainless Steel
33	Lever	Carbon Steel	Carbon Steel	Carbon Steel	Stainless Steel	Stainless Steel
34	Lever Pin	Carbon Steel	Carbon Steel	Carbon Steel	Stainless Steel	Stainless Steel
35	Lock Nut	Carbon Steel	Carbon Steel	Carbon Steel	Stainless Steel	Stainless Steel
36	Washer	Carbon Steel	Carbon Steel	Carbon Steel	Stainless Steel	Stainless Steel
37	Lift Dog	Stainless Steel	Stainless Steel	Stainless Steel	Stainless Steel	Stainless Steel
38	Nut	SA194 Gr. 2H	SA194 Gr. 2H	SA194 Gr. 2H	SA194 Gr. 8	SA194 Gr. 8
39	Stud	SA193 Gr. B7	SA193 Gr. B7	SA193 Gr. B7	SA193 Gr. B8	SA193 Gr. B8
	Gag Cap					
40	Gag Bolt	Carbon Steel	Carbon Steel	Carbon Steel	Stainless Steel	Stainless Steel
41	Gag Nut	Carbon Steel	Carbon Steel	Carbon Steel	Stainless Steel	Stainless Steel
42	Washer	Carbon Steel	Carbon Steel	Carbon Steel	Stainless Steel	Stainless Steel
	Bellows Valve					
43	Bellows Assembly	316 Stainless Steel	316 Stainless Steel	Inconel®625	316 Stainless Steel	Inconel®625
44	Disc Holder Gasket	Soft Iron	ASME SA240 316	Soft Iron	ASME SA240 316	ASME SA240 316

Taylor Valvel reserves the right to substitute Inconel® or 17/7SS in lieu of 316SS for higher pressure springs.
Materials: WCB/WCC-ASME SA216, CF8M-ASME SA351

2500 Component Parts

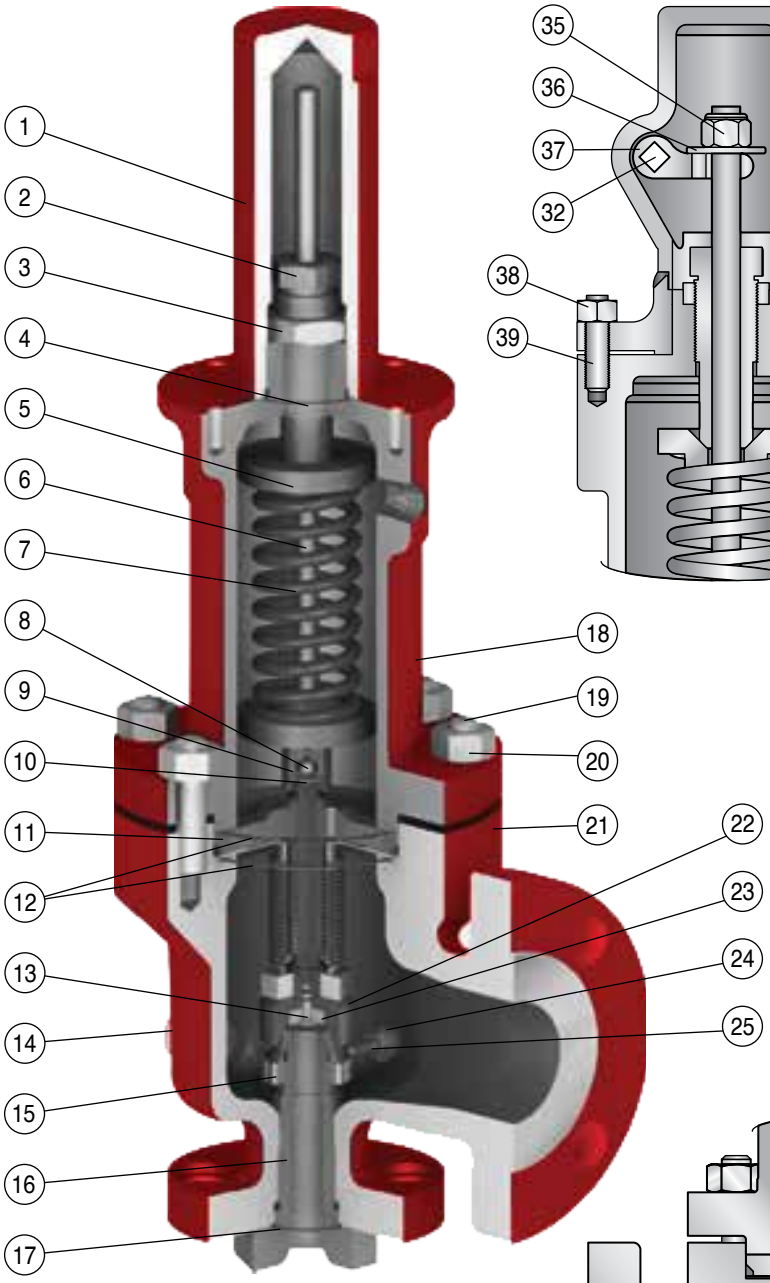

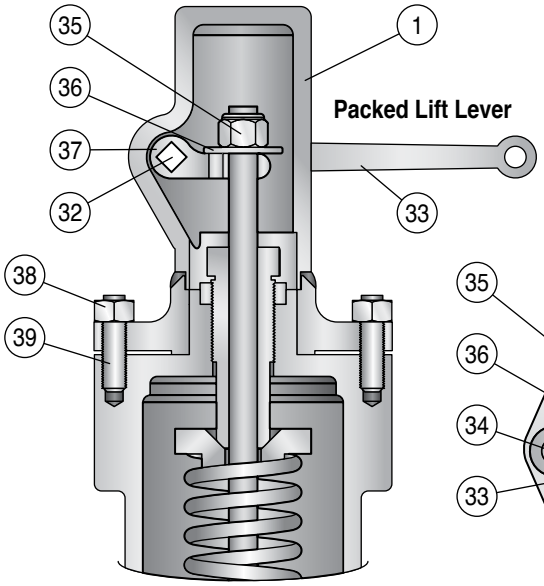

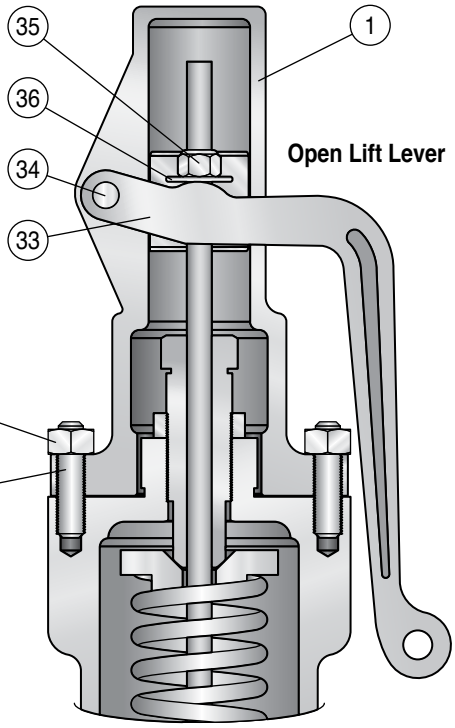

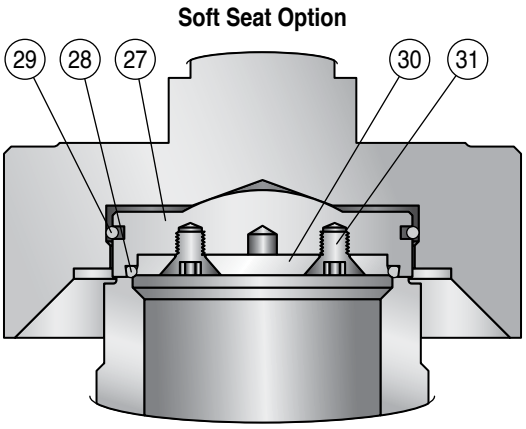

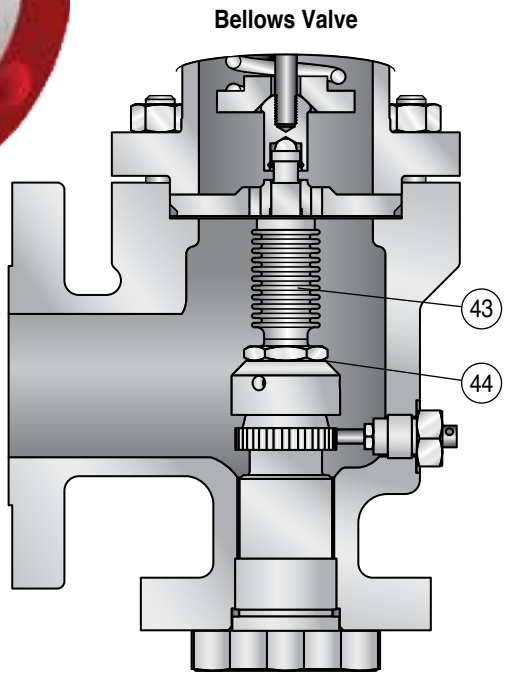

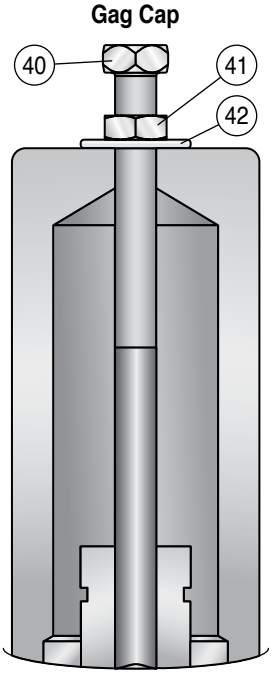

Taylor Valve Technology
8300 S.W. 8th Street
Oklahoma City, Oklahoma 73128

TEL 405.787.0145
FAX 800.805.3401
WEB www.taylorvalve.com
EMAIL info@taylorvalve.com

EMPLOYEE OWNED
Since 2020

Precise.

Quality.

Reliable.

4/21/25